innkeeper 1rx™

Digital Hybrid

FEATURES	1rx	i2	i4
» Excellent Separation of Caller and Talent Voice	•	•	•
» 16 bit DSP Technology	•	•	•
» Auto-Answer (Switchable On/Off)	•	•	•
» Proprietary Auto Null Algorithm (50 dB null)	•	•	•
» Conferencing		•	
» AGC, Ducking, Presence	•		
» 1 kHz Tone Generator	•	•	•
» Memory/Speed Dial		•	•
» Alpha-Numeric Keypad		•	•
» Menu with Backlit LCD Display		•	•
» Send XLR Line Input	1	2	4
» Mic/Line Switch	•		
» Master Send XLR		•	•
» Caller XLR Line Output	1	2	4
» Mix Out XLR Line Output	•		
» Front Panel 1/4" Headphone Jack	•		
» Monitor Handset Jacks		2	4
» Remote Control via Screw Terminals or RS-232	•	•	•
» RIU-IP Remote IP Interface	•	•	•
» Monitor Speaker Terminals	•		
» Send and Caller Signal Level LEDs	•	•	•
» Send and Caller Volume Controls	•	•	•

A Hybrid Jam-Packed with Features.

This single-line hybrid is perfect for radio or television talk shows, teleconferencing, or auto-answer IFB feeds. From the front panel you can call, drop and adjust headphone volume. Front panel LEDs display signal levels and option status. The Send and Caller Volume controls and feature switches are hidden behind an access panel to prevent unauthorized "tweaking". innkeeper 1rx is compatible with Guest Module 1 and RIU-IP remote control interfaces. For Talk Show applications combine innkeeper 1rx with the Concierge 2x6 Switch Core and Guest Module GM2x6 (on page 21).

Automatic Gain Control (AGC). Adjusts the caller volume to an average level. AGC will tame a loud caller, and boost a quiet caller or quiet long distance connection.

Caller Ducking. Drops the Caller output level by 9 dB whenever the host speaks. This keeps the host "in charge" of the show, automatically making sure the caller never overpowers the host by attempting to talk over the host's voice.

Presence. Press the "Presence" button to get a richer sound from the caller's voice. This digital filter brings back some of the low-end lost in transmission.

Remote Control. Control innkeeper 1rx with the Guest Module 1, Screw Terminals, a RS-232 cable or the RIU-IP Remote IP Interface.

innkeeper 2/4 shown for comparison

1rx = innkeeper 1rx i2 = innkeeper 2 i4 = innkeeper 4

© 2016, JK Audio, Inc.
1311 E. 6th St. Sandwich, IL. 60548
800.552.8346 • 815.786.2929
Se Habla Español
jkaudio.com
info@jkaudio.com

JK Audio

innkeeper 1rx™

Digital Hybrid

BLOCK DIAGRAM

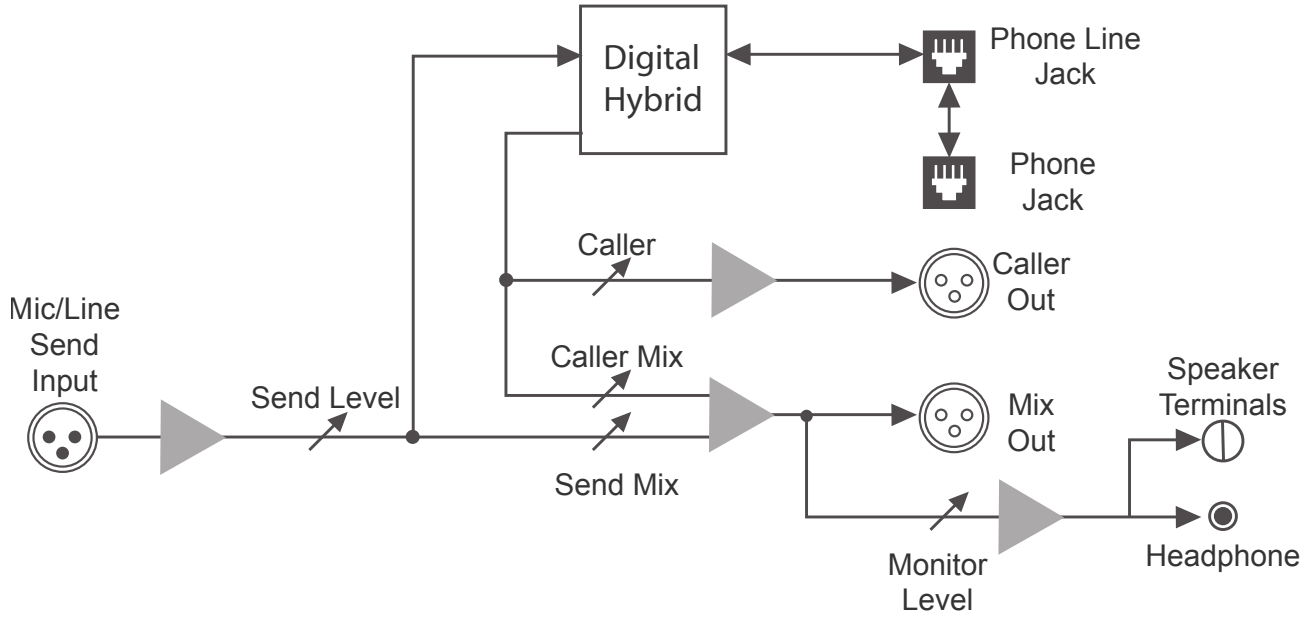

SPECIFICATIONS

CE

Input

Balanced Female XLR Mics:	1k ohms / 15 mV RMS; -34 dBu nom.; Mic/Line Pad Switch = +6 dBu max

Output

Male XLR:	200 ohms / 500 mV RMS; -4 dBu nom.; +14 dBu max
Stereo Headphone:	8 ohms, 250 mW per channel
Speaker:	Screw Terminals, 8 ohms, 1 watt
Phone Line:	RJ11C
Aux Phone:	RJ11C

Ringer:	0.8B REN
Isolation:	1500 VAC
Frequency Response:	Telephone Side 200 Hz-3600 Hz
Remote Control:	ASCII RS-232 (DB9)
	Screw Terminal I/O
	IP Web Server (optional)
Power:	120-240 VAC Power Supply (internal)
Size:	1.75" x 7.3" x 19" (4.5 x 18.6 x 48.3 cm)
Weight:	5.7 lbs (2.6 kg)

© 2016, **JK Audio, Inc.**
1311 E. 6th St. Sandwich, IL. 60548

800.552.8346 • 815.786.2929
Se Habla Español

jkaudio.com
info@jkaudio.com

JK Audio